Enclosures

Wall mount - A series

Single door IP65

- Robust construction in sheet steel, powder-coated (RAL7035).
- Mounting plate and base mounted gland plate included.
- Direct earth contact via copper plated mounting studs.
- Door opens to approximately 140o and easily changed right/left hand mounting.
- Stainless steel also available, upon request

Part No.	Size W x H x D (mm)	Internal depth	Mounting plate W x H (mm)	Weight (kg)
A1000	400 x 400 x 210	195	370 x 350	13.5
A1020	400 x 600 x 210	195	370 x 550	17.5
A2145	400 x 500 x 210	195	370 x 450	17.0
A1021	600 x 400 x 210	195	570 x 350	17.5
A1027	500 x 700 x 210	195	470 x 650	24.9
A1030	600 x 600 x 210	195	570 x 550	24.9
A1040	600 x 800 x 210	195	570 x 750	31.7
AE1020	400 x 600 x 250	235	370 x 550	17.8
AE1027	500 x 700 x 250	235	470 x 650	24.9
AE1030	600 x 600 x 250	235	570 x 550	24.3
AE1040	600 x 800 x 250	235	570 x 750	31.2
AT1020	400 x 600 x 300	285	370 x 550	19.1
AT1021	600 x 400 x 300	285	570 x 350	19.1
AT1025	500 x 500 x 300	285	470 x 450	22.1
AT1030	600 x 600 x 300	285	570 x 550	27.6

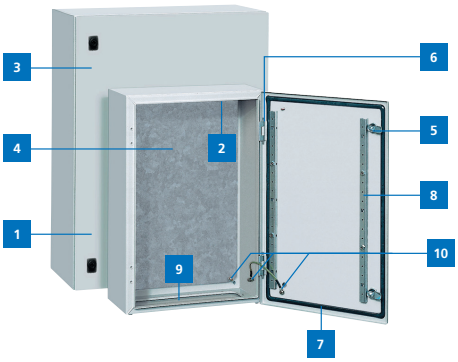

Product features

1 Constructions in 1.5 mm sheet steel. Powder-coated RAL 7035, textured.
2 Box with narrow bevelled edge.
3 One piece. Machine-welded corners.
4 Galvanised mounting plate (2.5 mm) included in all model ranges.
5 Standard lock systems with 3 mm-double bolt inserts.
6 Hinged door versions with concealed hinges approx. 140° opening.
7 Door featuring integral rubber sealing gasket (foamed)/high protection rating IP 65-EN60529. 2-door version IP 55.
8 Perforated galvanised door rails guarantee optimal mounting possibilities.
9 Includes gland plates in the base.
10 Earthing studs for door, enclosure and mounting plate.

Ventilation plugs

IP68 Plugs to Reduce Condensation

Pressure equaliser to prevent condensation within IP rated enclosures.

Waterproof enclosures with an IP rating greater than IP67 can form condensation when air pressure changes with weather conditions. To compensate for this, a ventilation plug should be fitted which compensates for changes in air pressure through a waterproof membrane.

The high quality, breathable and watertight PES membrane provides continuous pressure exchange between the enclosure and its surrounding environment, and ensures protection against humidity. The high water resistance of the membrane enables a protection rating of IP66, IP67 and IP69K.

Part No.	Thread size
ZB5054	M12

SW1	H	L	A
17	17,8	10	M12x1,5

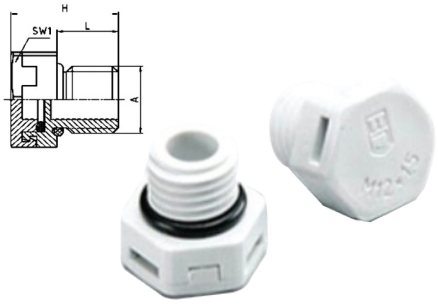

DKSH Australia Pty. Ltd., 14-17 Dansu Court, Hallam VIC 3803, Australia. Freecall 1800 010 113, Fax (03) 9554 6677, http://direct.dksh.com.au/solar