Advancing Renewable Technology

Washer, Electrical Equipment Bond

WEEB

Patent Pending

INSTALLATION INSTRUCTIONS

For Clenergy PV-ezRack only

Please read carefully before installing.

Wiley Electronics recommends that the sufficient details of the installation be submitted to the AHJ for approval before any work is started.

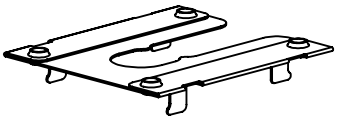

WEEB-CMC

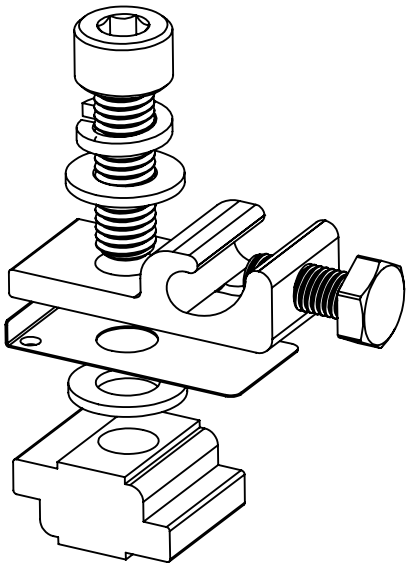

WEEBLug-15.8

Products are tested to UL 467, CAN/CSA-C22.2 No. 41
US/Canadian standards for safety grounding and bonding equipment

Intertek

Document Number 104-0404-000065-001

Wiley Electronics LLC. 2006-2011© – All Rights Reserved

3098177

WEEB COMPATIBILITY

The WEEB family of products can be used to bond anodized aluminum, galvanized steel, steel and other electrically conductive metal structures. All installations shall be in accordance with NEC requirements in the USA and with CSA C22.1 in Canada. The WEEBs are for use with modules that have a maximum series fuse rating of less than 25A.

Standard Top Down Clamps

The WEEBs used for bonding the PV modules to the mounting rails are compatible with various cross-sections of module frames. The following are examples of module frames that are compatible. Notice that the WEEB teeth are positioned completely under the edge of the module frame.

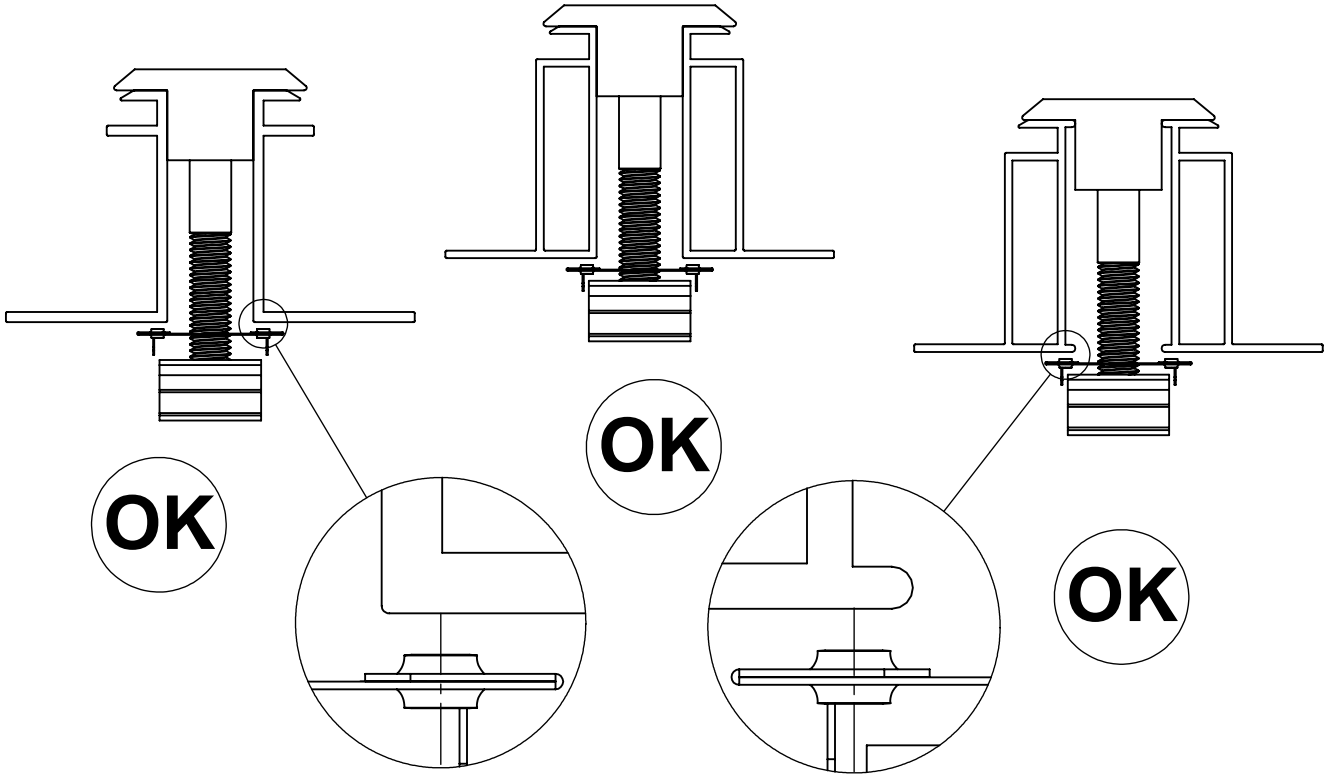

The following is an example of a module frame that is incompatible with the WEEB. The WEEB teeth are positioned only partially under the edge of the module due to the lip on the top edge of the module frame.

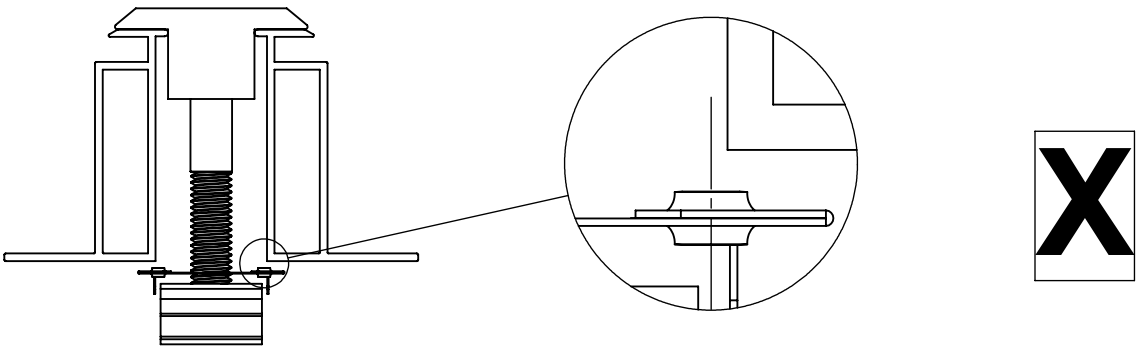

Wiley Electronics LLC. 2006-2011© – All Rights Reserved

Top Down Clamps for Lipped Modules

The following are a few variations of lipped solar modules mounted with inverted U-shaped clamps. Notice that the force which the inverted U-shaped clamp exerts is in line with the WEEB teeth.

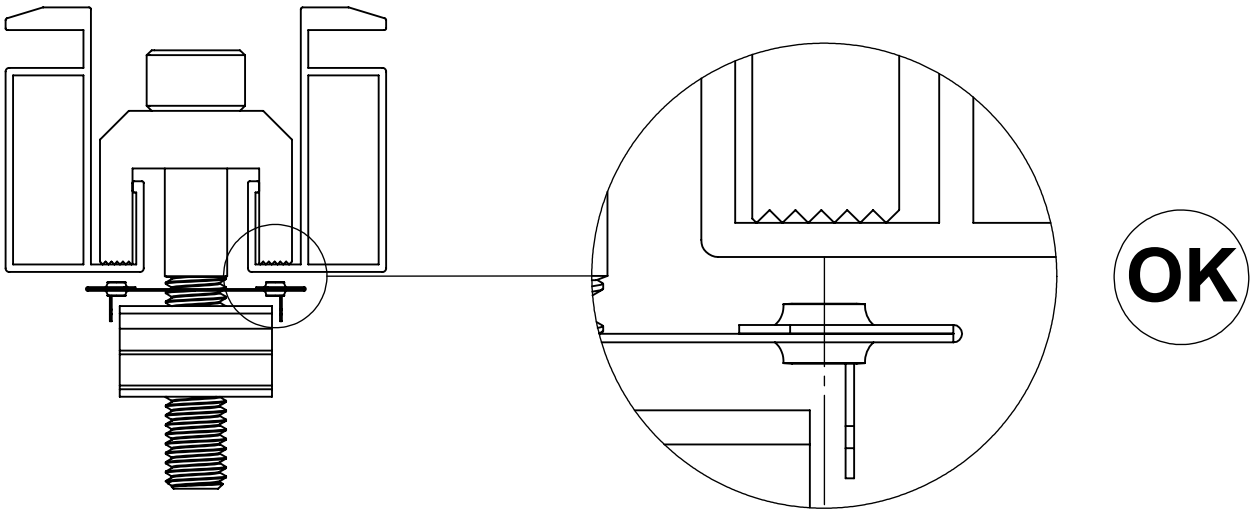

Low-Lipped Module

The WEEB-CMC is not compatible with high lipped modules. The WEEB teeth do not intersect with the solar module frame.

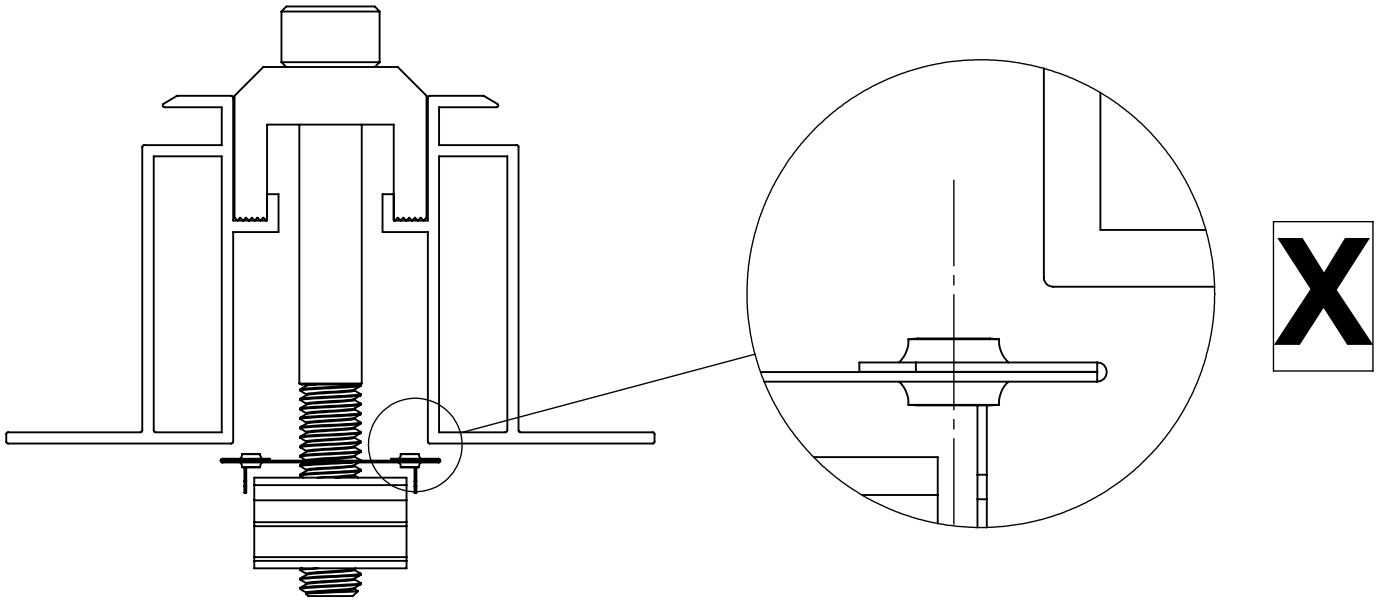

High-Lipped Module

Wiley Electronics LLC. 2006-2011© – All Rights Reserved

WEEB COMPATIBILITY

Module frames like those shown here may have a ridge or lip on the bottom edge of the frame that would prevent the WEEB teeth from fully embedding.

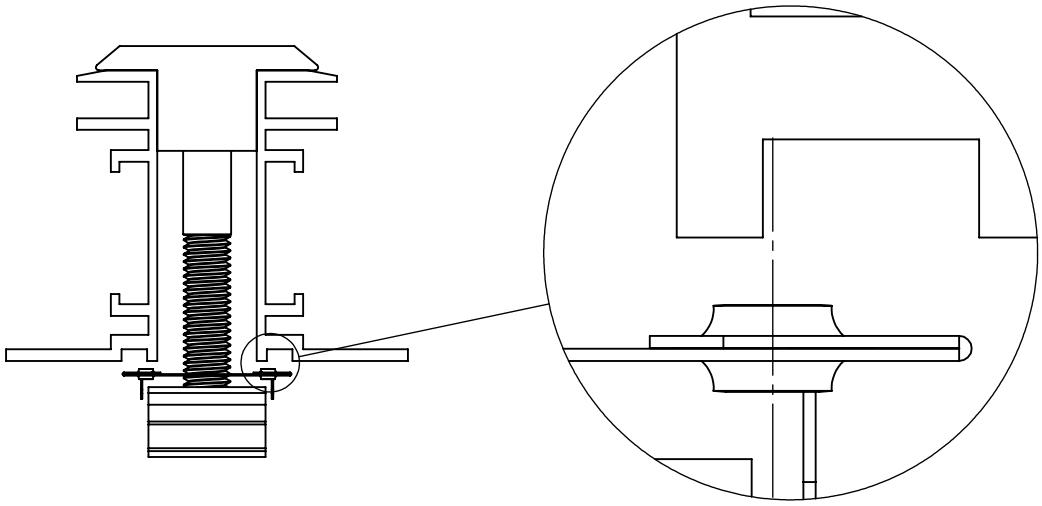

X

Shown here is an example of a groove that will prevent the WEEB teeth from properly penetrating the module frame. This type of frame is not compatible with the WEEB

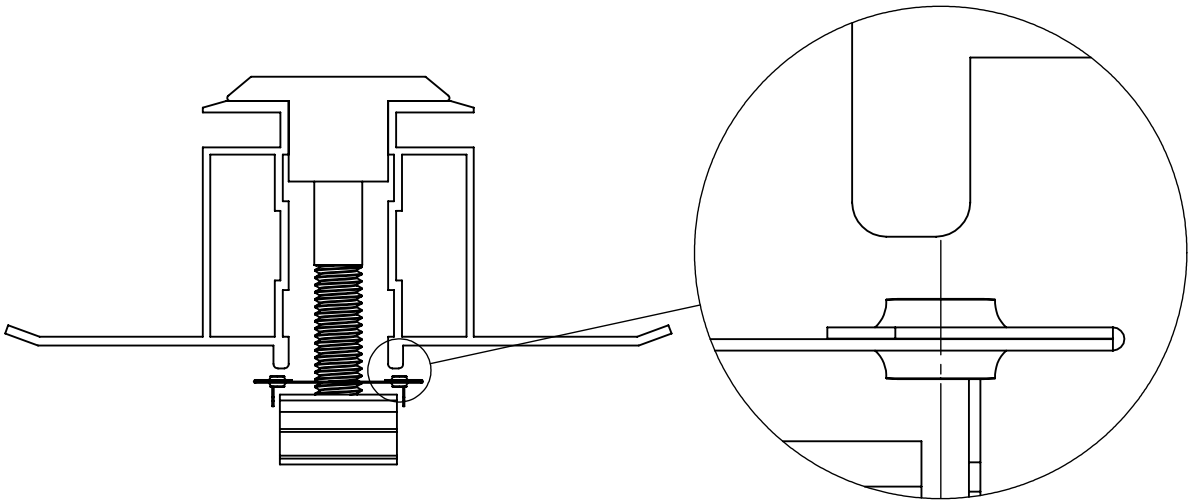

X

Shown here is an example of a lip that will prevent the WEEB teeth from properly penetrating the module frame. This type of frame is not compatible with the WEEB

Important Note:

Inspect each module frame used with a WEEB to ensure that the bottom mounting face of the frame is flat, and that there are no hinderances to embedding WEEB teeth. Do not use a module with a frame that prevents the WEEB teeth from embedding fully.

Wiley Electronics LLC. 2006-2011© – All Rights Reserved

WEEB-CMC on Boxed Module Frames

Certain module frames do not have enough structural strength to withstand the force required to embed a WEEB. These frames will deform and therefore not allow sufficient penetration of the WEEB teeth. The general requirements for minimum module frame thickness of "boxed" type module frames are illustrated below.

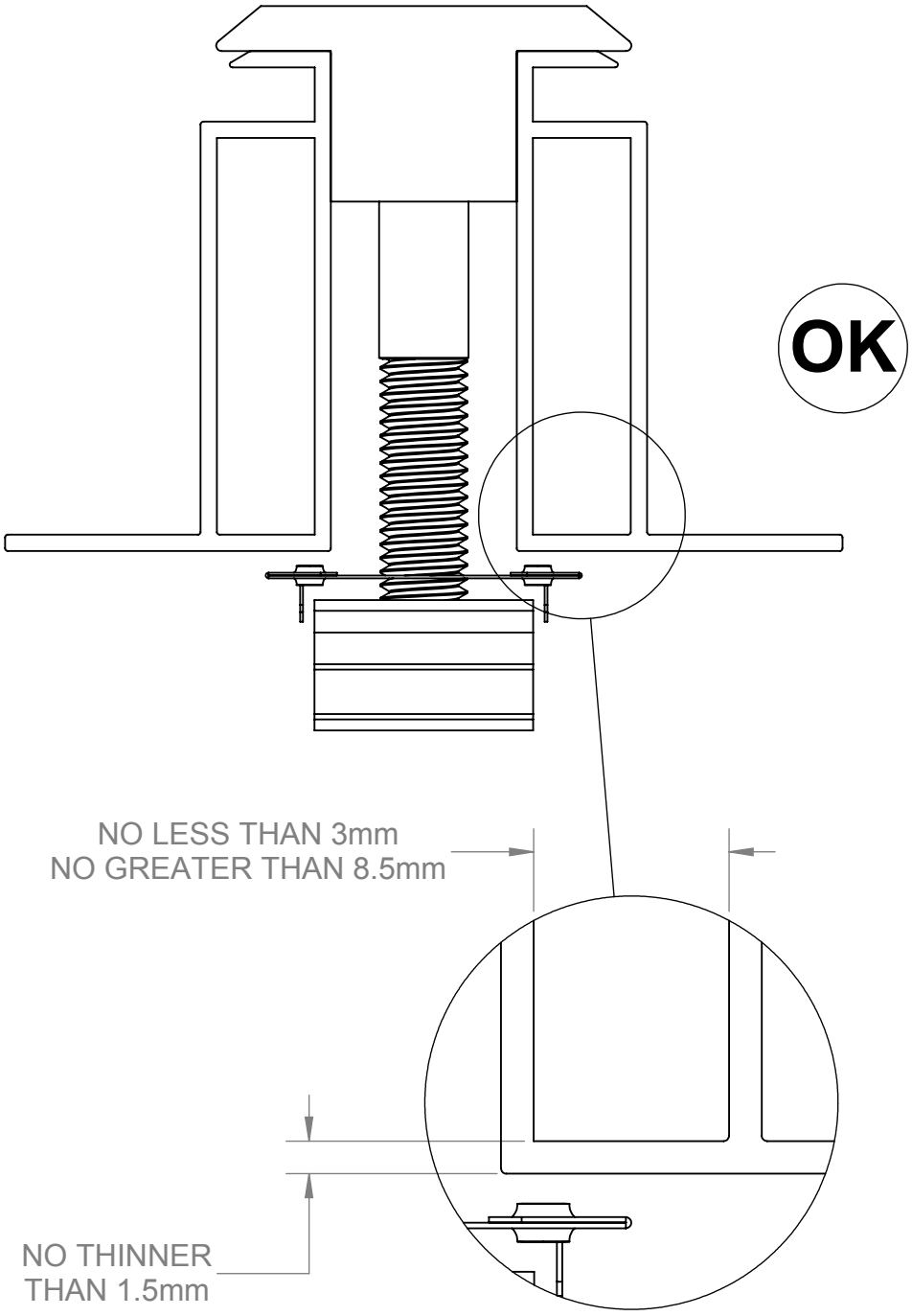

Wiley Electronics LLC. 2006-2011© – All Rights Reserved

SYSTEM OVERVIEW

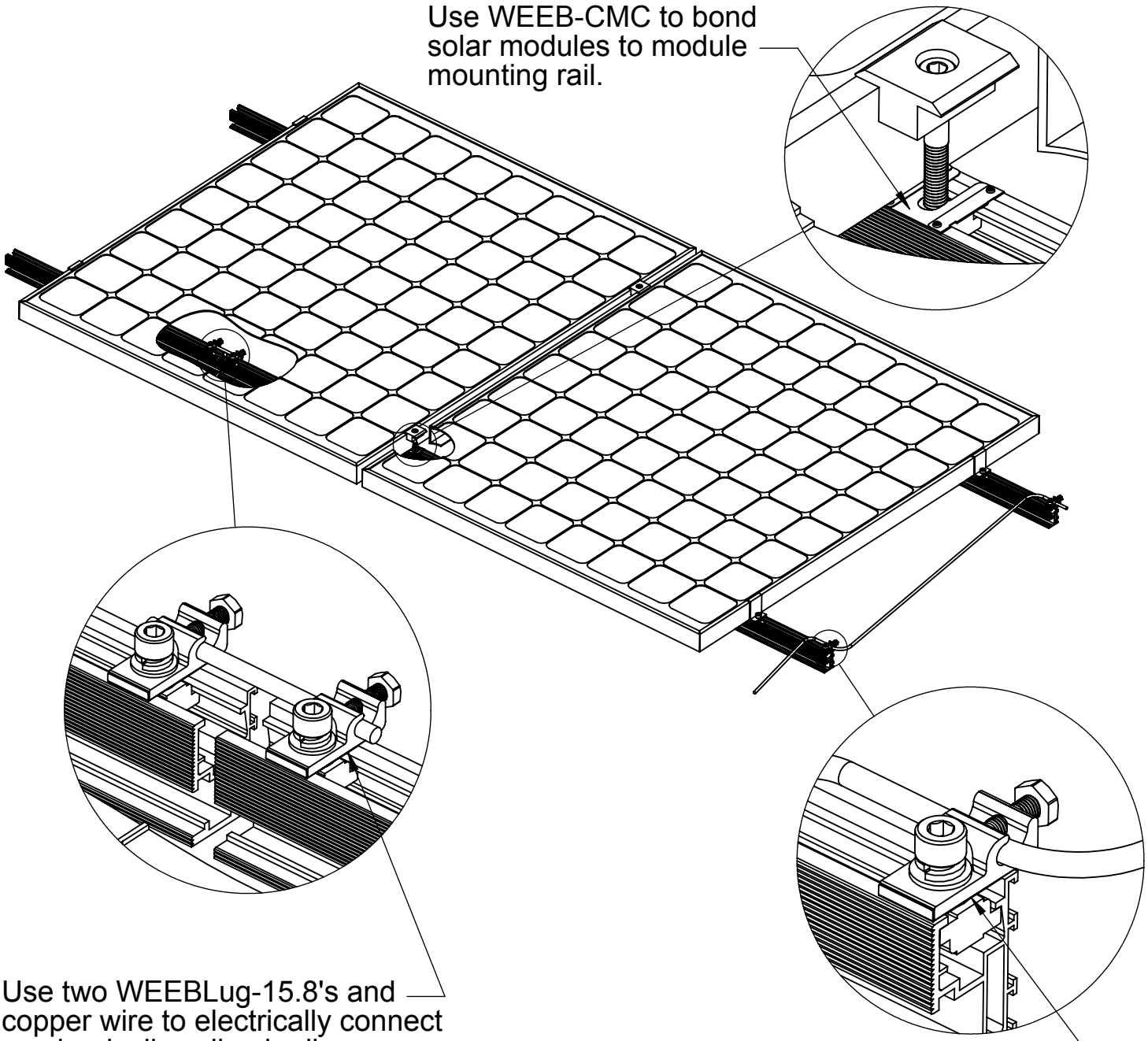

Important notes

1. **Use general purpose anti-seize compound on fastener threads when installing WEEBs.**
2. **The NEC section 690.43 states, "Exposed non-current carrying metal parts of module frames, equipment, and conductor enclosures shall be grounded in accordance with 250.134 or 250.136(A) regardless of voltage."**
3. **WEEBs are intended for SINGLE USE ONLY. Functionality will not be guaranteed if reused.**

Wiley Electronics LLC. 2006-2011© – All Rights Reserved

WEEB-CMC ASSEMBLY

①

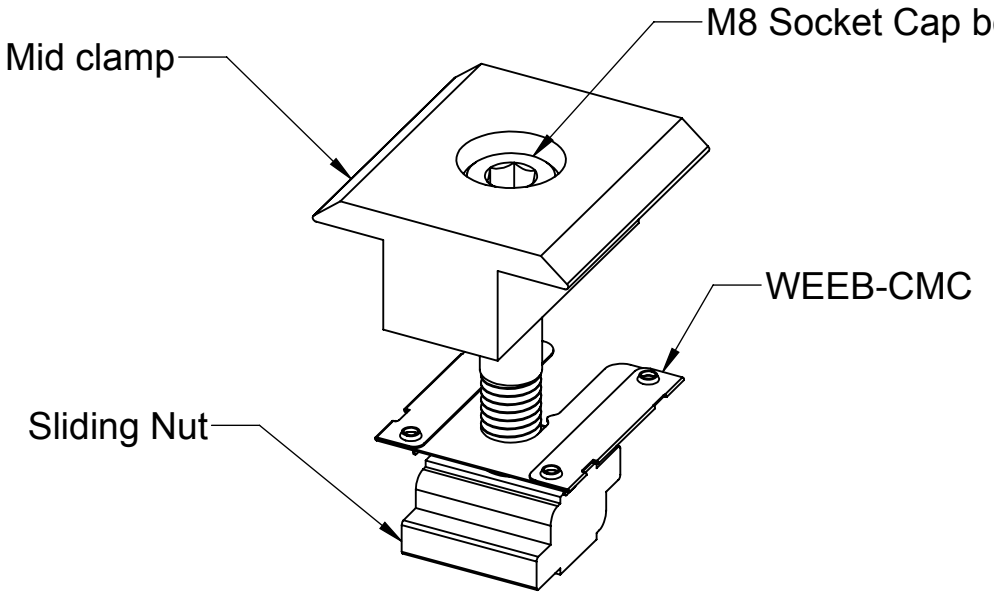

Pre-assemble WEEB-CMC to mid-clamp assembly as shown. Pre-assembling WEEB-CMC to mid-clamp assembly will contain the small individual parts, reducing the possibility of losing parts during installation.

②

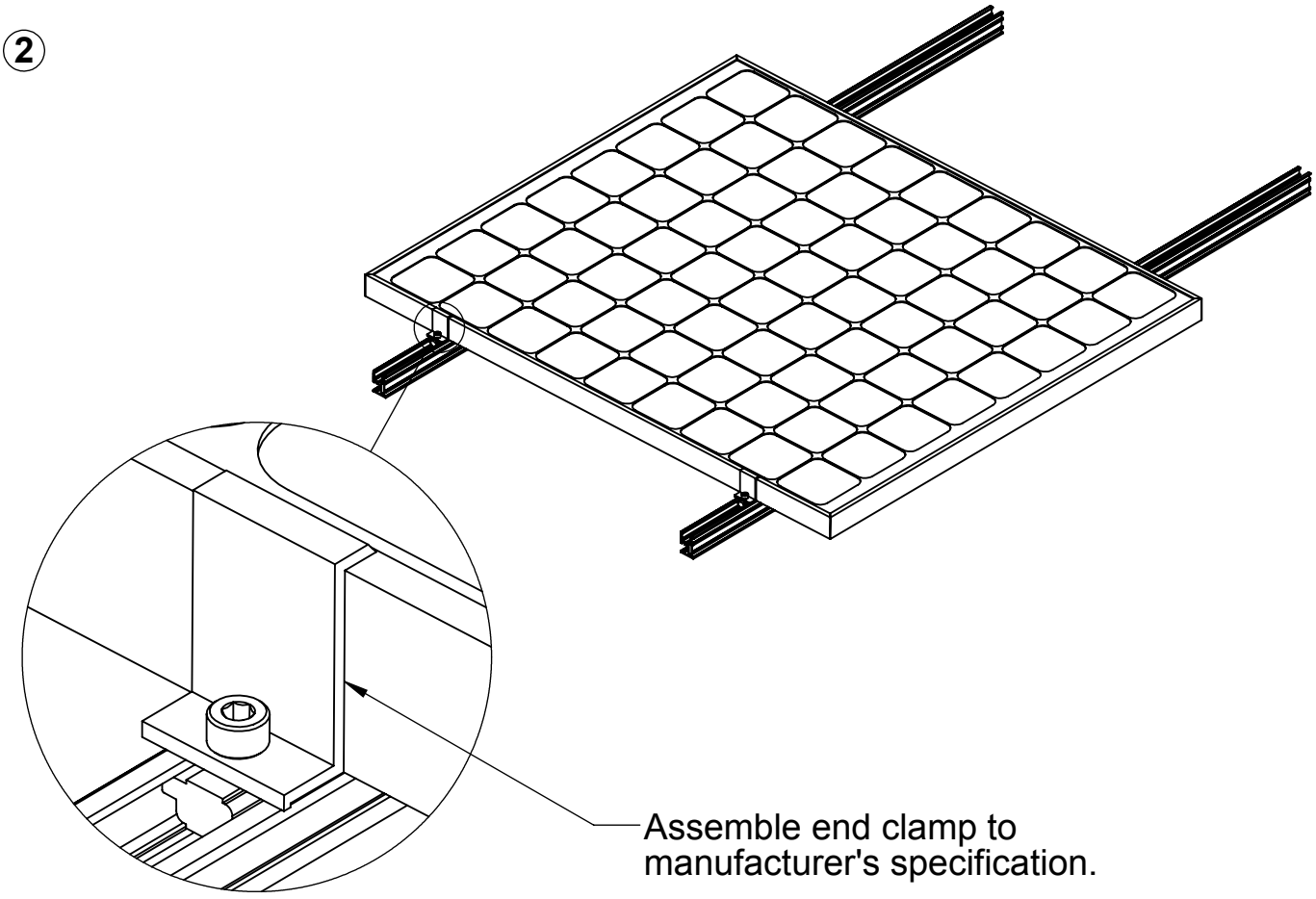

Wiley Electronics LLC. 2006-2011© – All Rights Reserved

③

Slide pre-assembled WEEB-CMC and mid-clamp assembly into position.

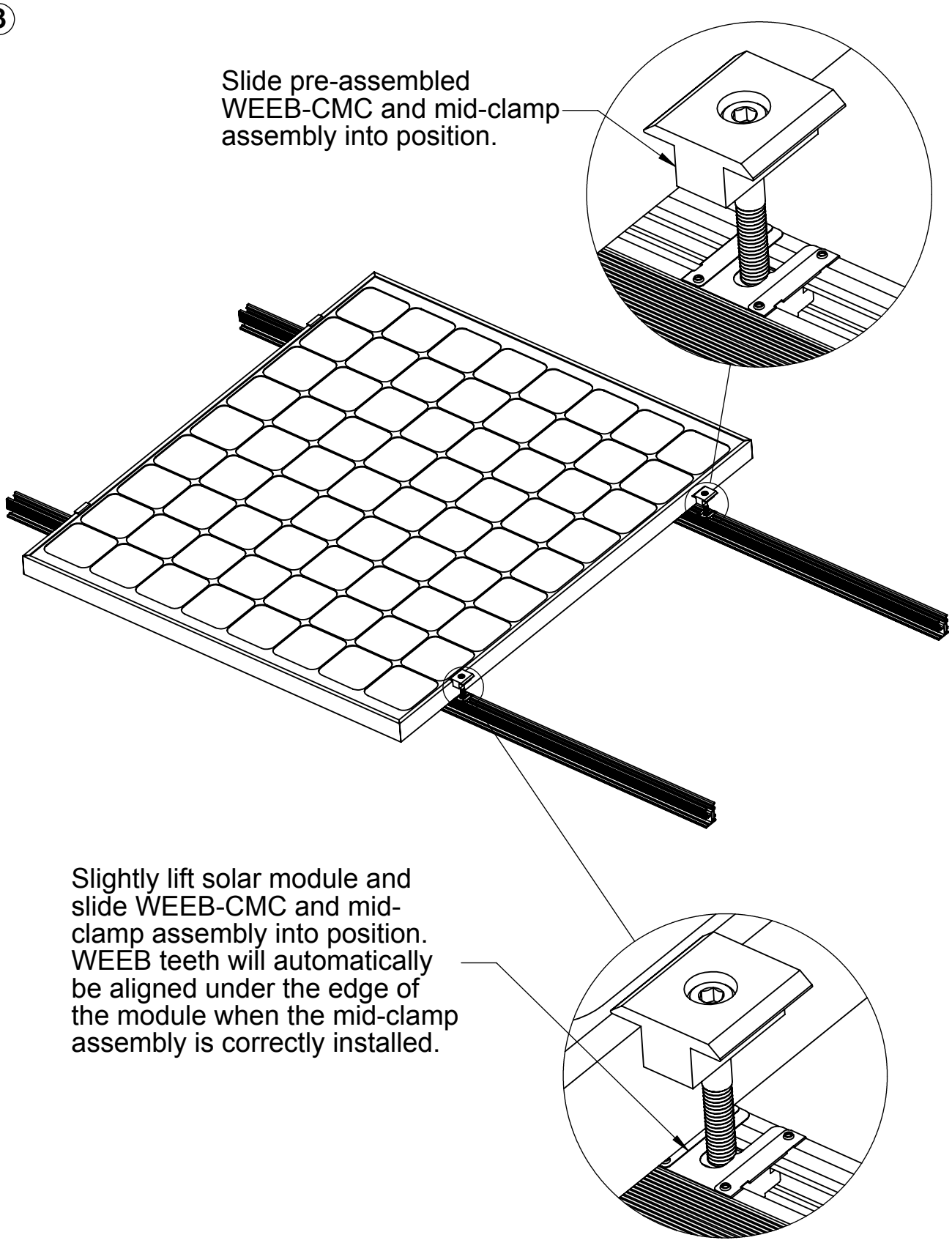

Slightly lift solar module and slide WEEB-CMC and mid-clamp assembly into position. WEEB teeth will automatically be aligned under the edge of the module when the mid-clamp assembly is correctly installed.

Important note:

To correctly install WEEB-CMC, ensure that both sides of the solar modules are completely positioned against the mid-clamp. Refer to WEEB compatibility page for illustrations. Visually check that WEEBs are properly positioned.

Wiley Electronics LLC. 2006-2011© – All Rights Reserved

Important note:

WEEBs are for SINGLE USE ONLY! Do not torque fasteners down if position of solar modules is not finalized. Only slightly tighten fasteners to keep modules in place.

④

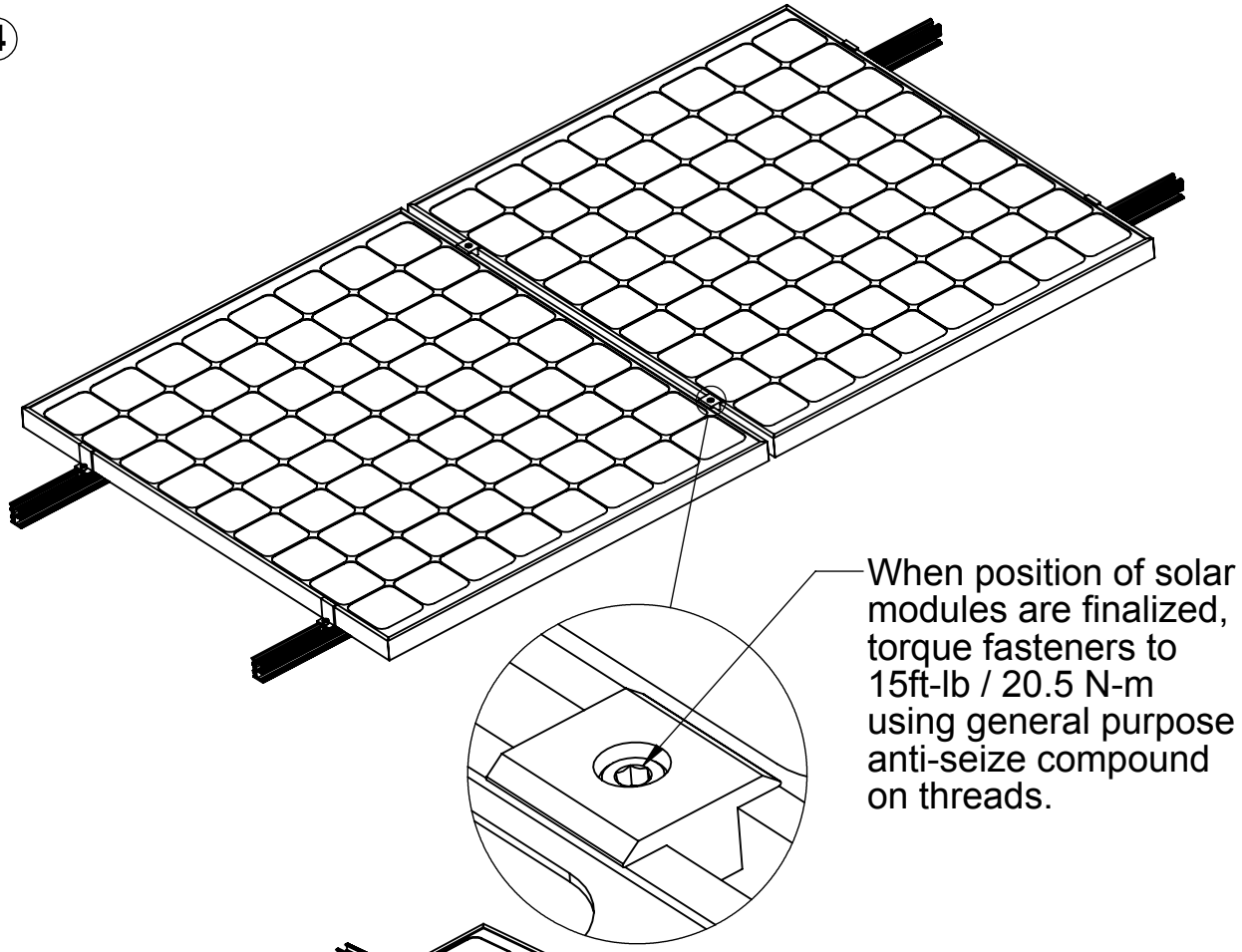

⑤

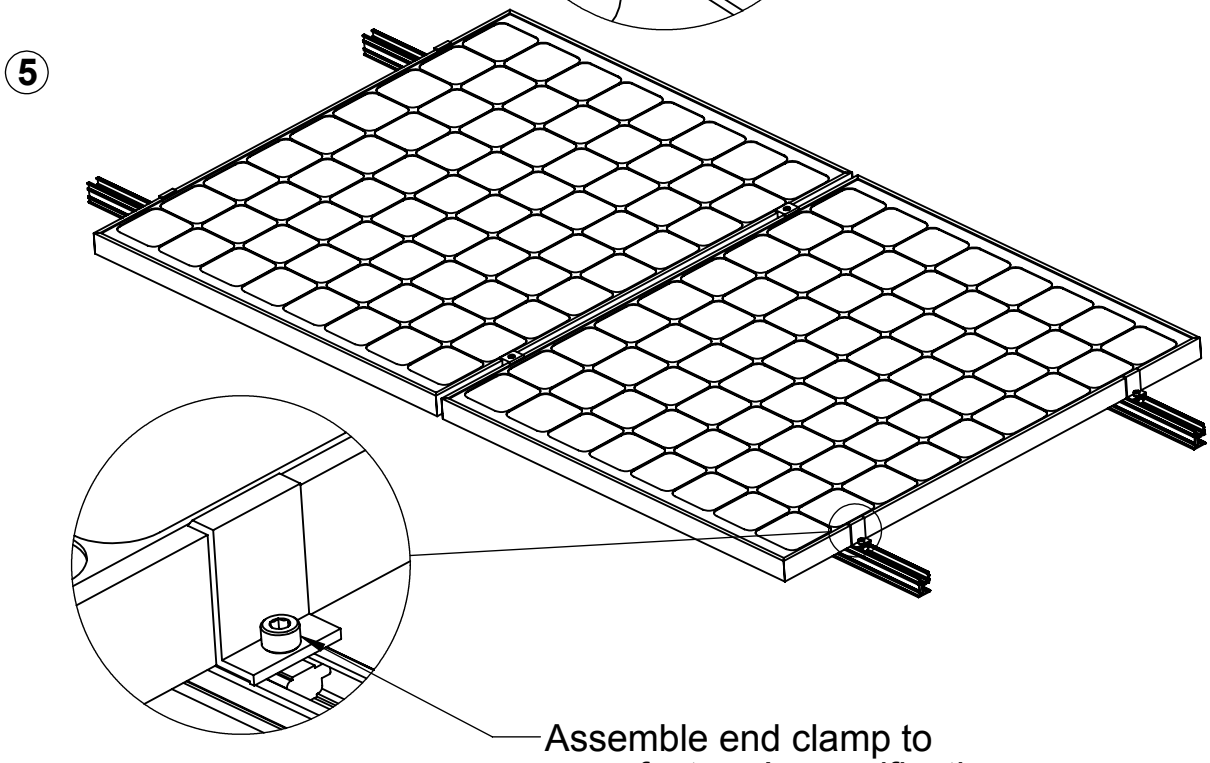

Wiley Electronics LLC. 2006-2011© – All Rights Reserved

WEEB-CMC LAYOUT

⑥

EVEN NUMBER OF MODULES IN ROW

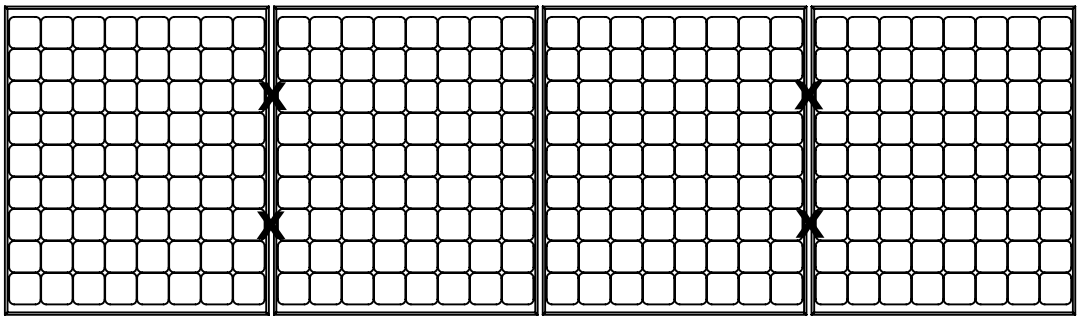

X DENOTES PLACES TO INSTALL WEEB-CMC

C X R = 4 X 1
WEEB-CMC NEEDED = C X R = 4 X 1 = 4

ODD NUMBER OF MODULES IN ROW

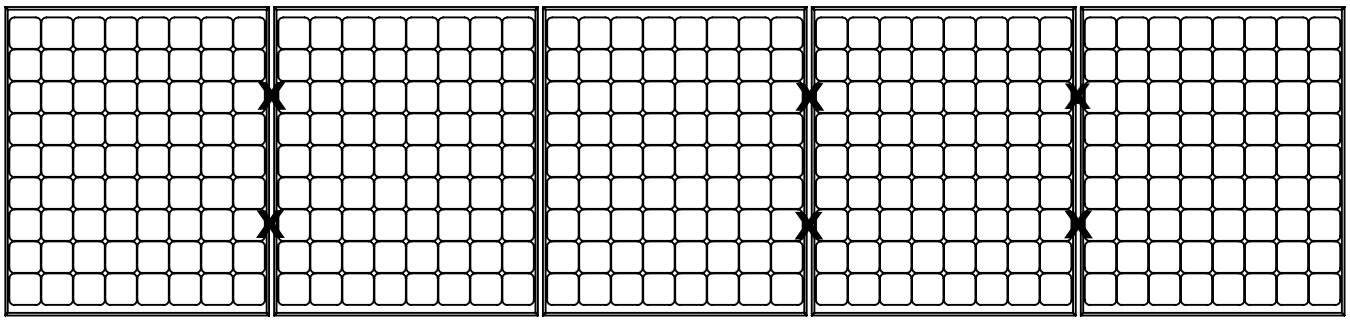

X DENOTES PLACES TO INSTALL WEEB-CMC

C X R = 5 X 1
WEEB-CMC NEEDED = [C+1] X R = [5+1] X 1 = 6

Note:

When replacing a single faulty module, also remove the adjacent module which contacts the same WEEBs as the faulty module. This will ensure that there are never ungrounded modules in the array.

Wiley Electronics LLC. 2006-2011© – All Rights Reserved

WEEBLUG ASSEMBLY

⑦

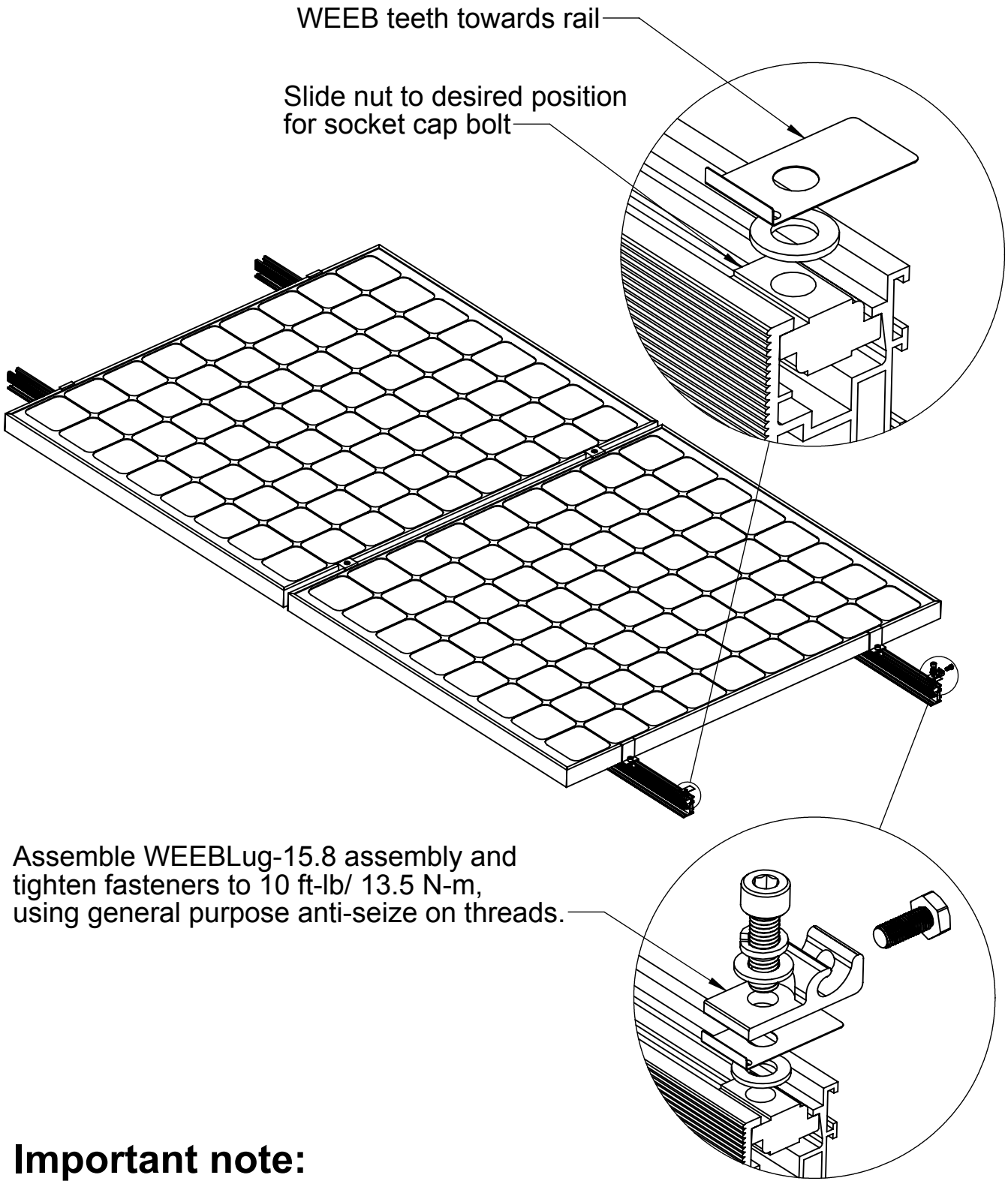

Important note:

1. **WEEB-15.8 that sits under the WEEBLug is for SINGLE USE ONLY! Ensure position is correct before tightening.**
2. **The WEEBLug-15.8 may be used with a maximum equipment ground wire of 6 AWG.**

Wiley Electronics LLC. 2006-2011© – All Rights Reserved

GROUND CONDUCTOR ASSEMBLY

⑧

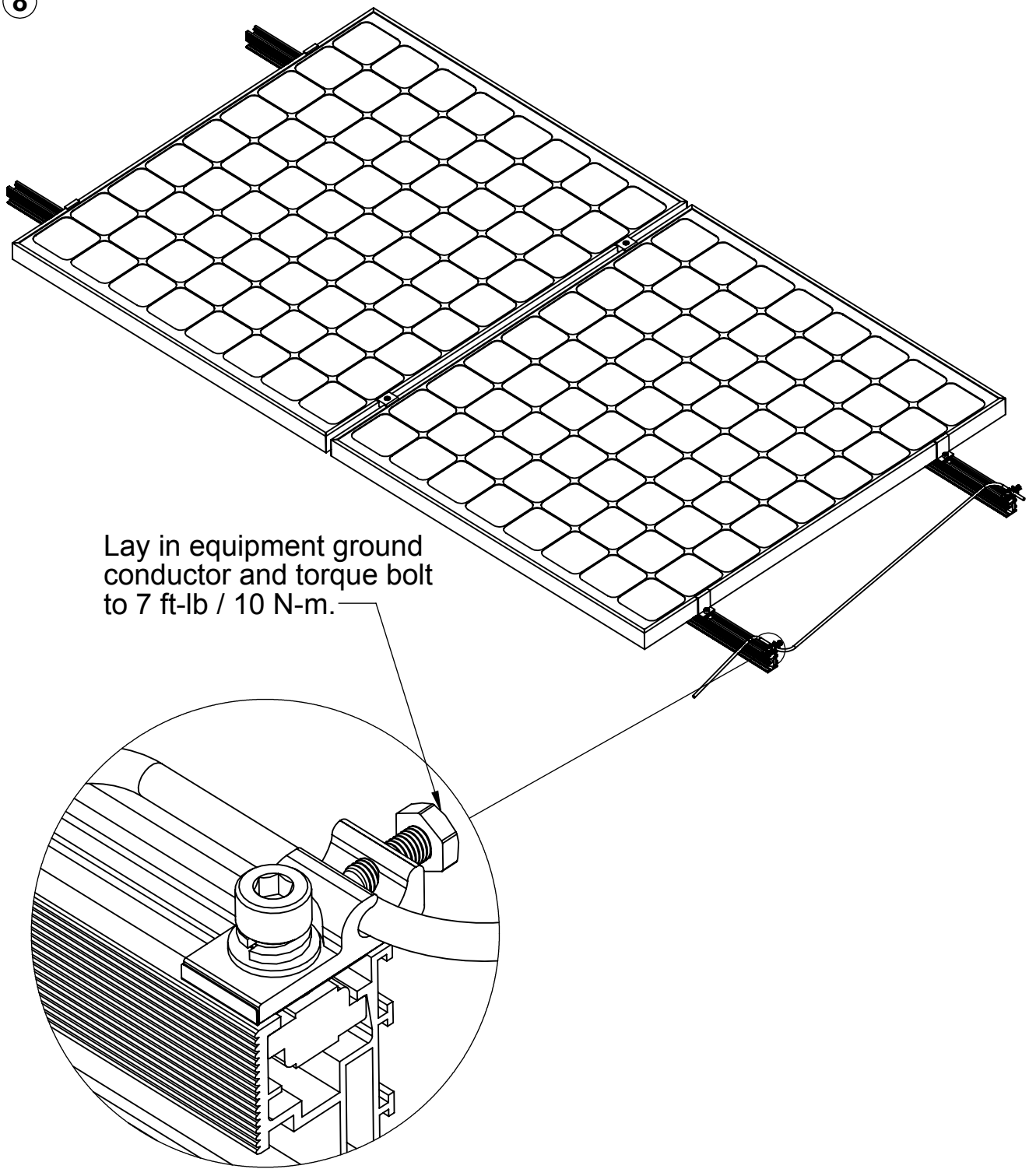

Important note:

1. **WEEB-15.8 that sits under the WEEBLug is for SINGLE USE ONLY. Ensure position is correct before tightening down.**
2. **The may be used with a maximum equipment ground wire of 6 AWG.**

Wiley Electronics LLC. 2006-2011© – All Rights Reserved

SPLICE KIT ASSEMBLY

⑨ Use two WEEBLug-15.8's and copper wire to electrically connect mechanically spliced rails.

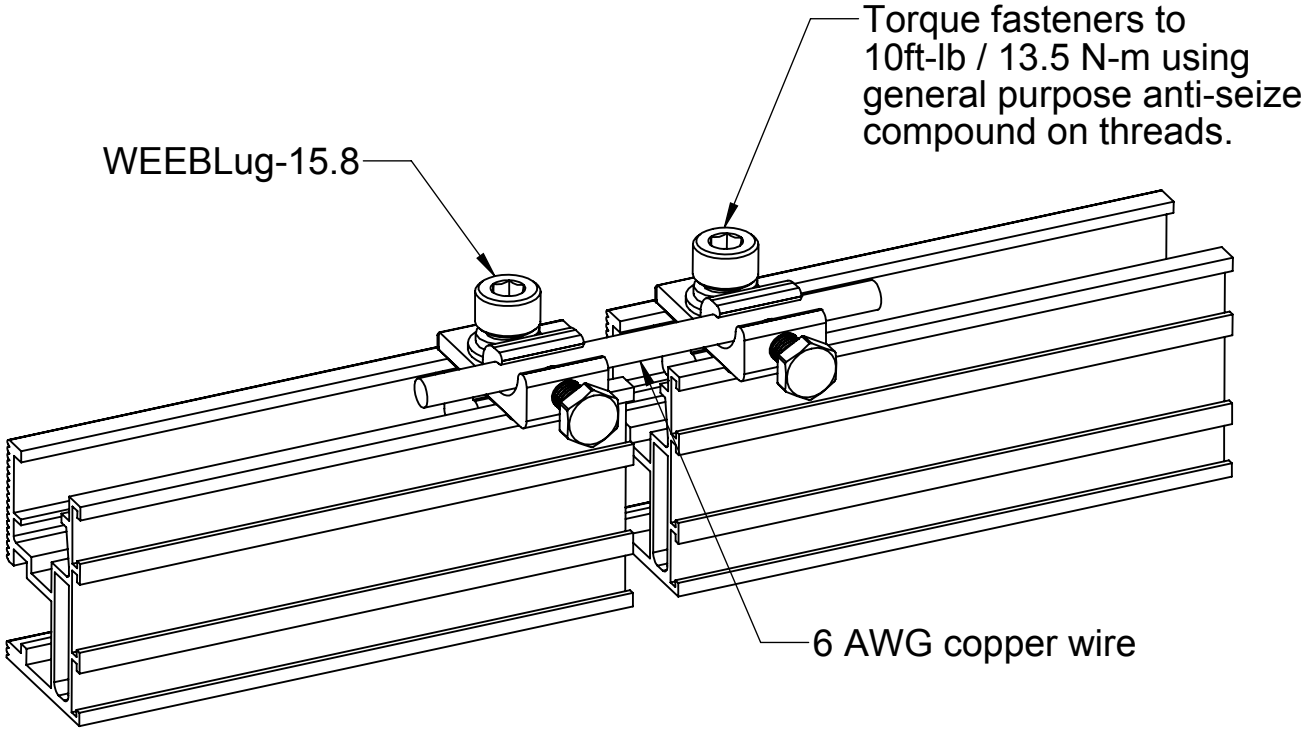

Wiley Electronics LLC. 2006-2011© – All Rights Reserved

WEEBLug-15.8 ASSEMBLY

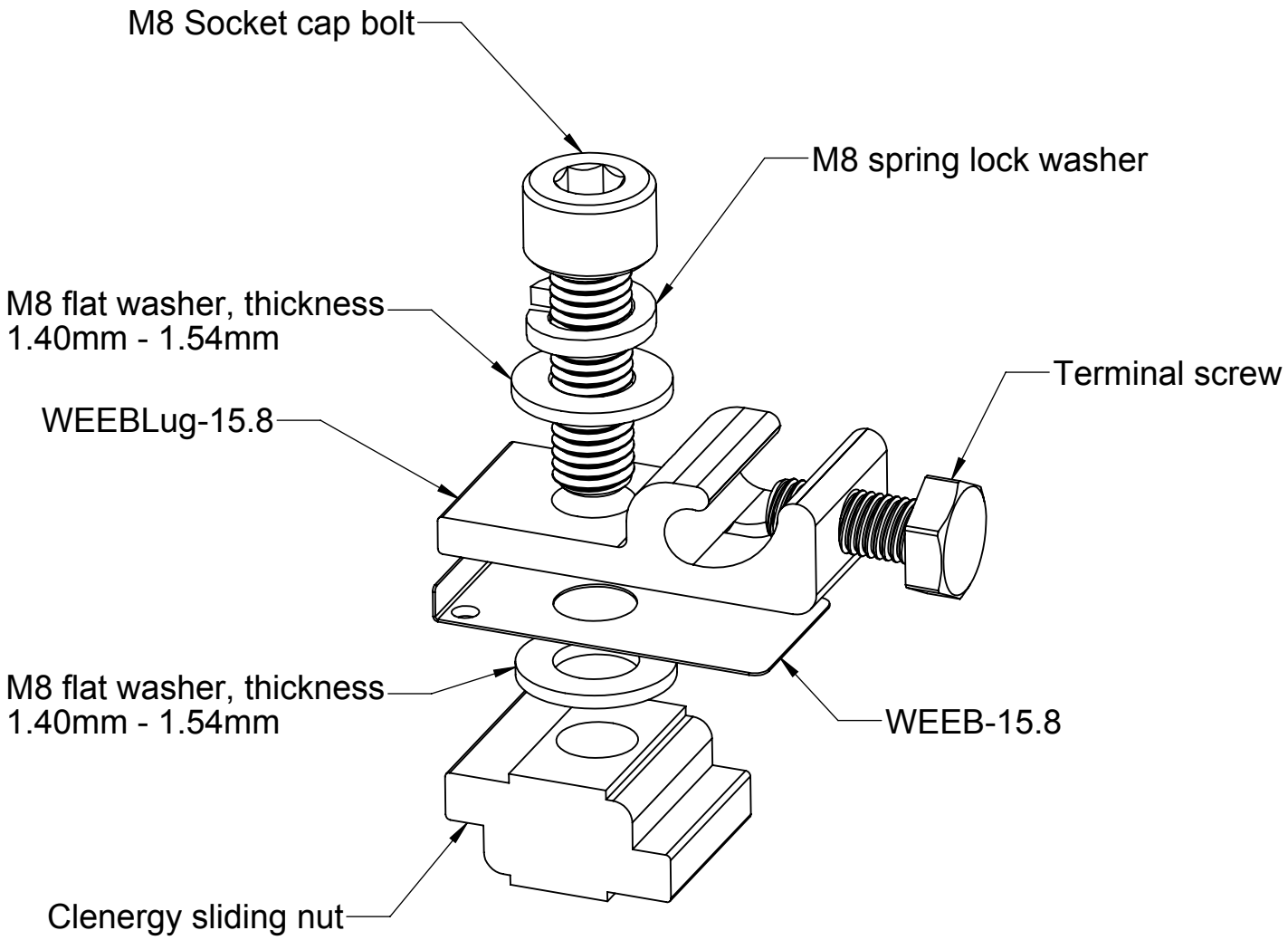

Important note:

1. **The thickness of the flat washer is critical in achieving a full engagement of the WEEB teeth and thus a sufficient electrical bond.**
2. **Use general purpose anti-seize compound on fastener threads when installing WEEBLugs.**

Wiley Electronics LLC. 2006-2011© – All Rights Reserved